CAUTION: THE INFMN ON THIS DOCUMENT IS THE PROPERTY OF BHEL. IT MUST NOT BE USED DIRECTLY OR INDIRECTLY IN ANY WAY DETRIMENTAL TO THE INTEREST OF BHEL

REV	DATE	ALTERED :
01		CHD & APPD :

NOTES:

1) DESIGN PRESSURE : 542 $Kg/Cm^2(g)$
2) DESIGN TEMPERATURE : 200 °C
3) WORKING MEDIUM : WATER
4) FOLLOW TDC No. : AS APPLICABLE
5) ALL DIMENSIONS ARE FINISHED DIMENSIONS
6) DESIGN, MANUFACTURING, INSPECTION, TOLERANCES AND TESTING SHALL BE AS PER IBR, ASME B16.9 & SA234
7) CONNECTING PIPE SIZE IS PIPE ID195X53
8) MATERIAL SPECIFICATION SHALL BE SA234WPC
9) CONSTRUCTION SHALL BE SEAMLESS
10) WEIGHT GIVEN IN BOM IS INDICATIVE ONLY.
11) AVERAGE INSIDE DIAMETER ON FITTING BODY TO GUARANTEE FLOW AREA MIN 90% OF THE CIRCULATION AREA OF THE CONNECTING PIPE

12.5

FIG-P

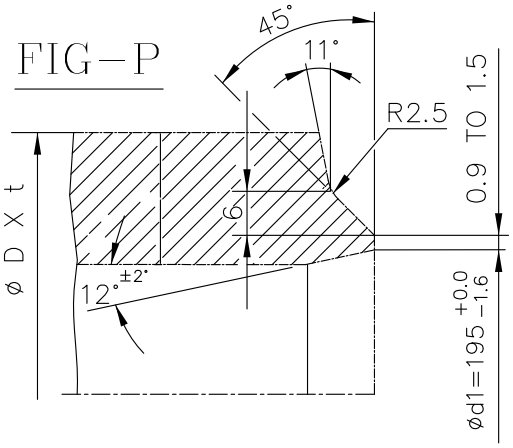

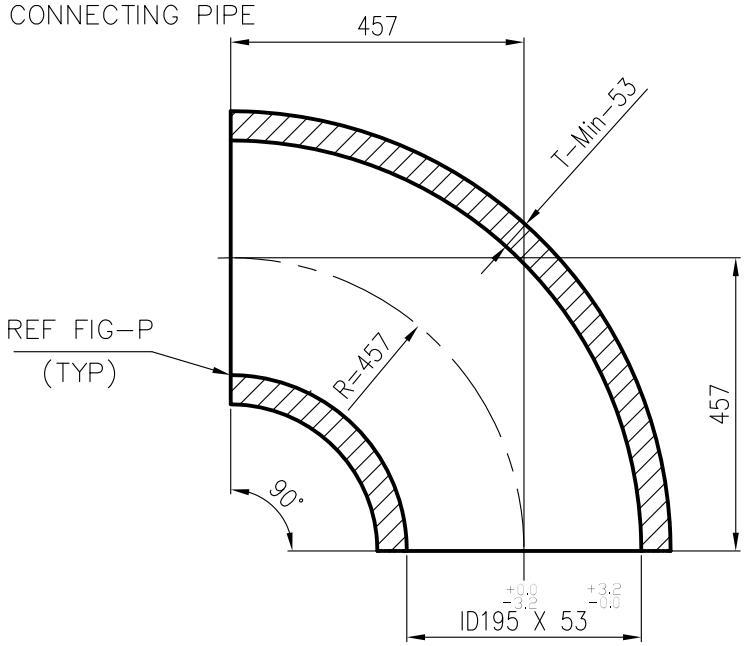

VAR No.	DESCRIPTION	STD	MATERIAL CODE / MATERIAL SPECN	A/C/P	UNIT	UNIT WT. (KG) / QUANTITY	
–	BW LR 90DEG ELBOW ID195X53		92 504 233 0000	A		232	560
			SA 234 WPC			1	

BHARAT HEAVY ELECTRICALS LIMITED
PIPING CENTRE
CHENNAI 600 017

	NAME	SIGNATURE	DATE
DRN	RP SINGH		21.02.19
CHD	KONDAPANAIDU		21.02.19
APPD	R SESHAGIRI		21.02.19

DEPT / CODE	ALL DIMENSIONS ARE IN MM	PROJECTION	SCALE	WEIGHT (Kg)	REF TO ASSY / OLD DWG
			N.T.S	232.560	–

TITLE: BW LR 90DEG ELBOW ID195X53

DRAWING NO : 4-80-423-82228

REV: 00